THE INFORMATION CONTAINED IN THIS DRAWING IS THE SOLE PROPERTY OF UNIT ELECTRONICS. ANY REPRODUCTION IN PART OR WHOLE IS STRICTLY PROHIBITED WITHOUT WRITTEN PERMISSION.

PROPRIETARY

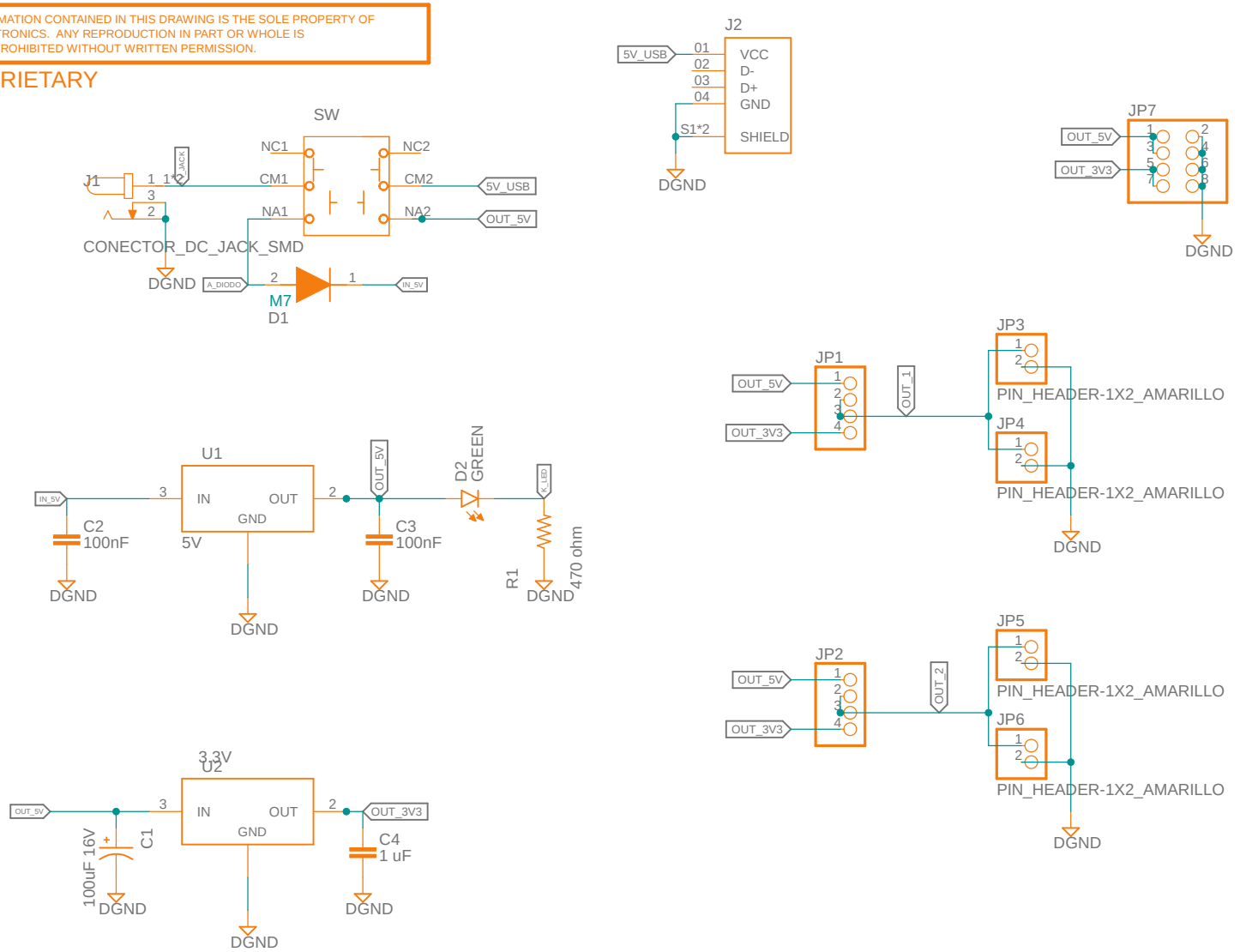

Title: UNIT - Fuente para protoboard MB-102	
SKU: AR0484	REV: 3
Last date time: 07/JUL/2022	SHEET: 1 of 1
File:	Sheet description: Módulo para protoboard de 400 y 830 pts, alimentación de 5V o 3.3V
	Author: Federico A. Hidalgo M.